piab Evolving automation

Item no: 0119558

T-connector M12 male, 2xM12 female

Our line includes inductive universal, electro-mechanical and pneumatic vacuum switches that are pre-set or adjustable.

- Serially connects two or several vacuum switches, VS4128, into one common output to the PLC or BUS-I/0.
- Quick and simple installation with standard male to female M12 eurofast cable assemblies.
- Suitable if the PLC or BUS-I/O is limited to one or two input signals from a vacuum system with several vacuum switches.

General

Material	ZN, TPU
Temperature	-25 - 90 °C
Weight	25 g

Electrical data

Current, max.	4000 mA
Humidity, max.	90 % RH
Safety classification	IP65
Voltage, max.	60 VDC

Dimension

Height	33 mm
Length	14.7 mm
Width	56 mm

Material

Name	TPU
Colour	WhiteTransparent
Temperature	-20 - 80 °C
Hardness	81 °Shore A

	TPU
Alcohol	++
Concentrated acids	-
Ethanol	n/a
Hydrolysis	-
Methanol	n/a
Oil	+++
Oxidation	++
Petrol	-
Wear resistance	+++
Weather and ozone	+++

Dimensional drawings

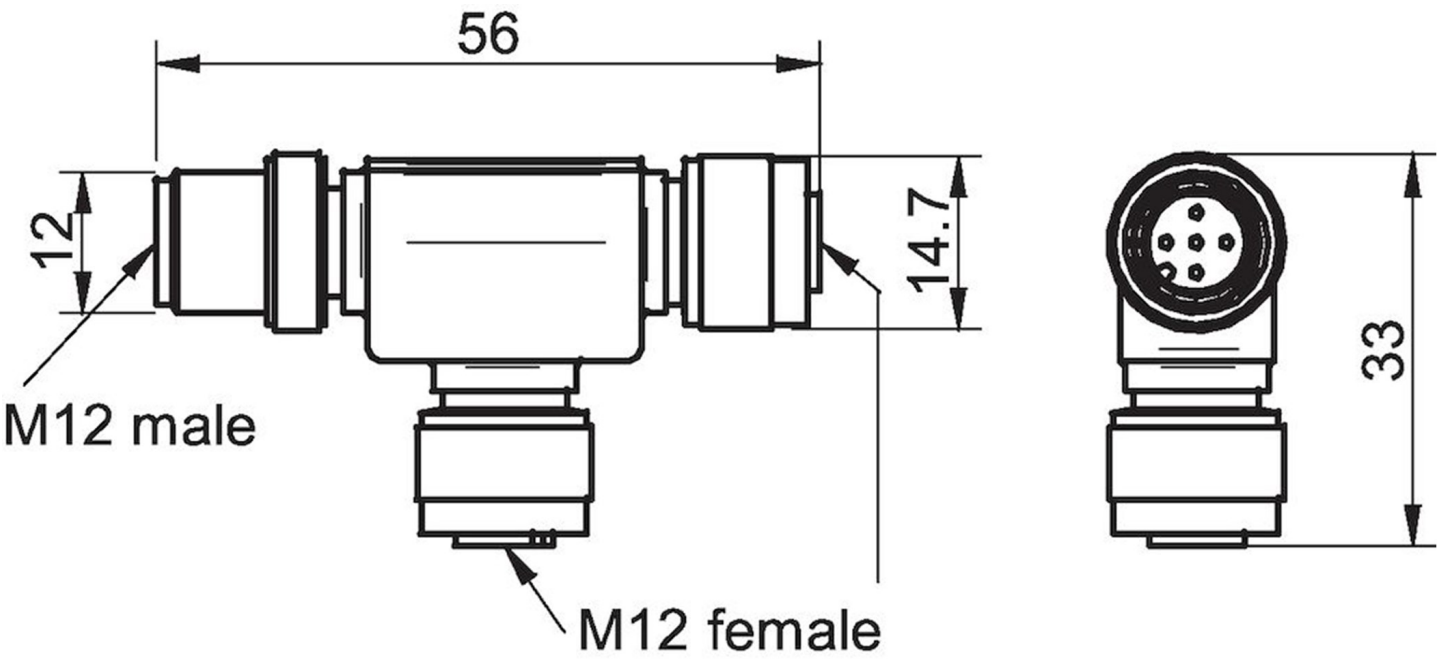

Accessories

0118322 | Cable M12 4-pin female, M12 4-pin male, PUR, L=2m