piab Evolving automation

Item no: 0104274

Solenoid valve DS 23 for control ON/OFF

Choose between solenoid, electrically or vacuum-controlled valves. The vacuum controlled valve (Vacustat) shuts off the flow of compressed air to the pump when the pre-set level is reached, and consequently the consumption of compressed air is minimised.

- Electric 3/2 valve with manual override.
- Quick and easy mounting with push-in connections.
- Body with 3 M5 ports.
- Suitable for compressed air, filtration 40µ.

General

Material	POM, SS, AL, CUZN, NBR, NI
Temperature	-18 - 50 °C
Weight, min.	100 g

Electrical data

Current, consumption	100 mA
Display	LED indicator
Load time rating	100 %
Safety classification	IP65
Voltage	24 (22-28) VDC

Dimension

Height	57.3 mm
Length	15.9 mm
Width	49.7 mm

Performance

Feed pressure	0.2 - 0.6 MPa

Pneumatic data

Flow (@ P1=6 bar and Δp=1 bar)	1.3 Nl/s
Life span	100000000 cycles
Valve function	NC
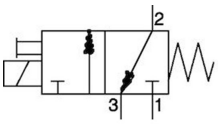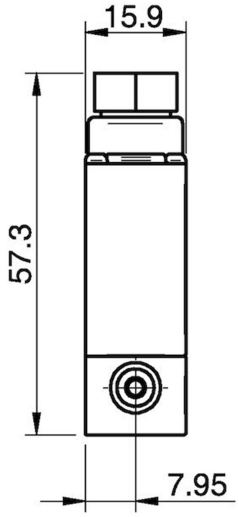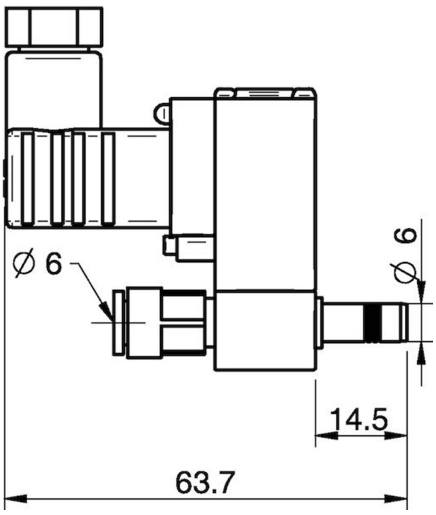
Dimensional drawings