piab Evolving automation

Item no: 0212315

Quick connect module G3/8”, 1 pos

- Common compressed feed port reduces cost of installation and shorted installation time
- Easy to remove, easy to service individual piCOMPCT®23 SMART when mounted in stack.
- Secure installation.
- Available for 1-4 units

General

Material	PA, SS, AL, CUZN, NBR
Temperature	-10 - 50 °C
Weight, max.	254 g

Performance

Feed pressure, max.	0.7 MPa
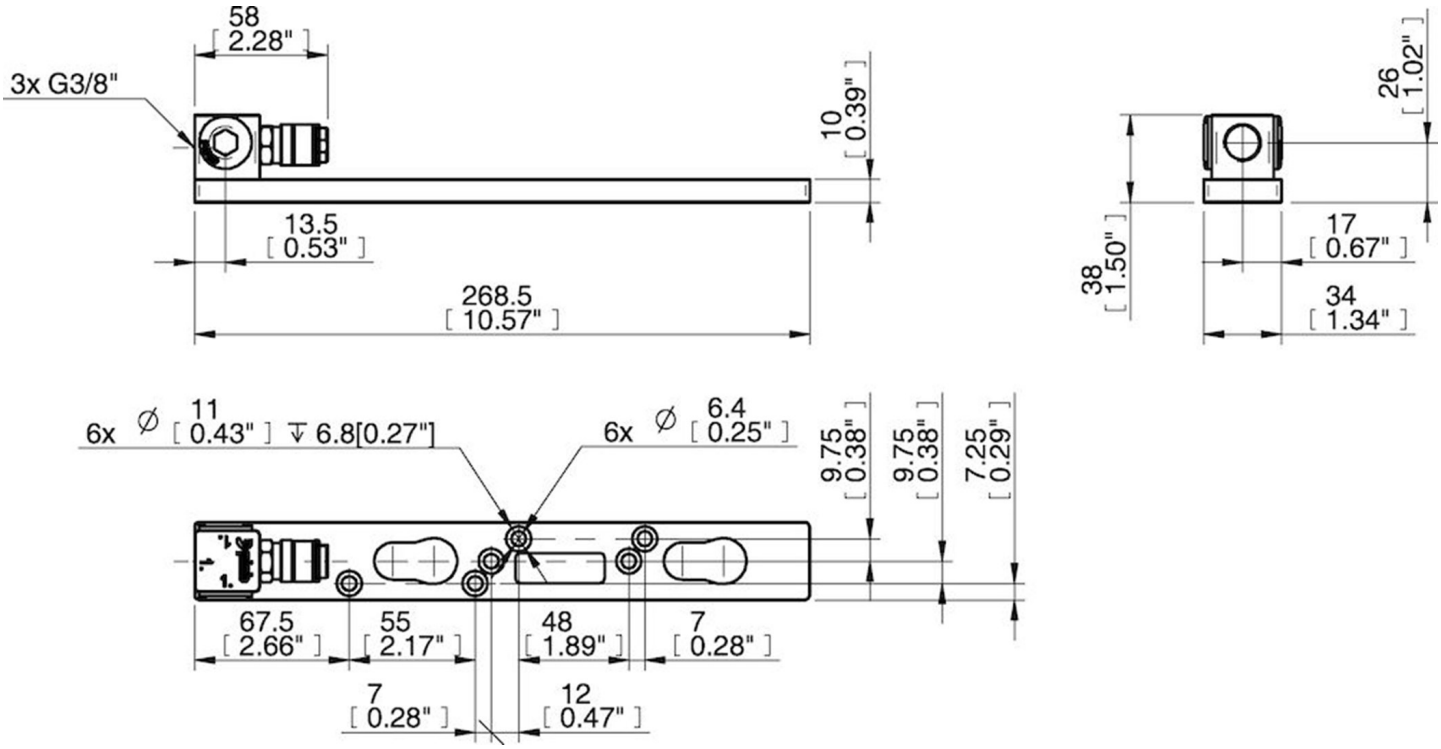
Dimensional drawings