piab Evolving automation

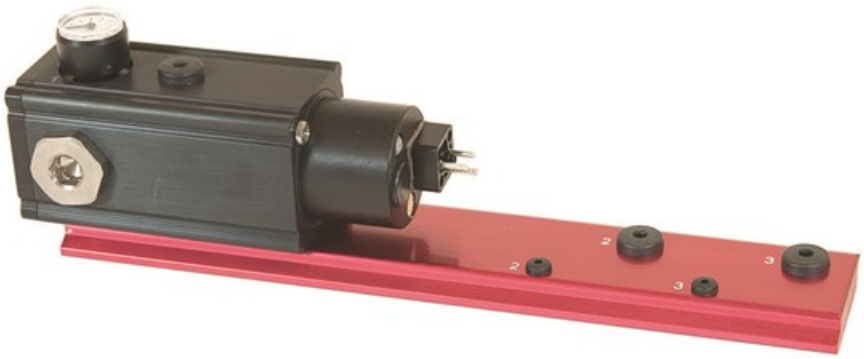

Item no: 0117783

Function V30

Choose between solenoid, electrically or vacuum-controlled valves. The vacuum controlled valve (Vacustat) shuts off the flow of compressed air to the pump when the pre-set level is reached, and consequently the consumption of compressed air is minimised.

- Patented COAX® technology
- Substantially lower air consumption
- Modular design for flexible performance
- Compact and durable with no moving parts
- With its low energy consumption it can be controlled directly from the control system

General

Material	PA, PBT, POM, SS, AL, CUZN, NBR, HDPE
Noise level	57 - 76 dBA
Temperature	0 - 50 °C
Weight	4900 - 5900 g

Electrical data

Current, consumption	40 mA
Display	LED
Ripple, max.	1 V_rms
Safety classification	IP65
Supply voltage	14 - 28 VDC
Supply voltage, nominal	24 VDC

Performance

Feed pressure, max.	0.7 MPa
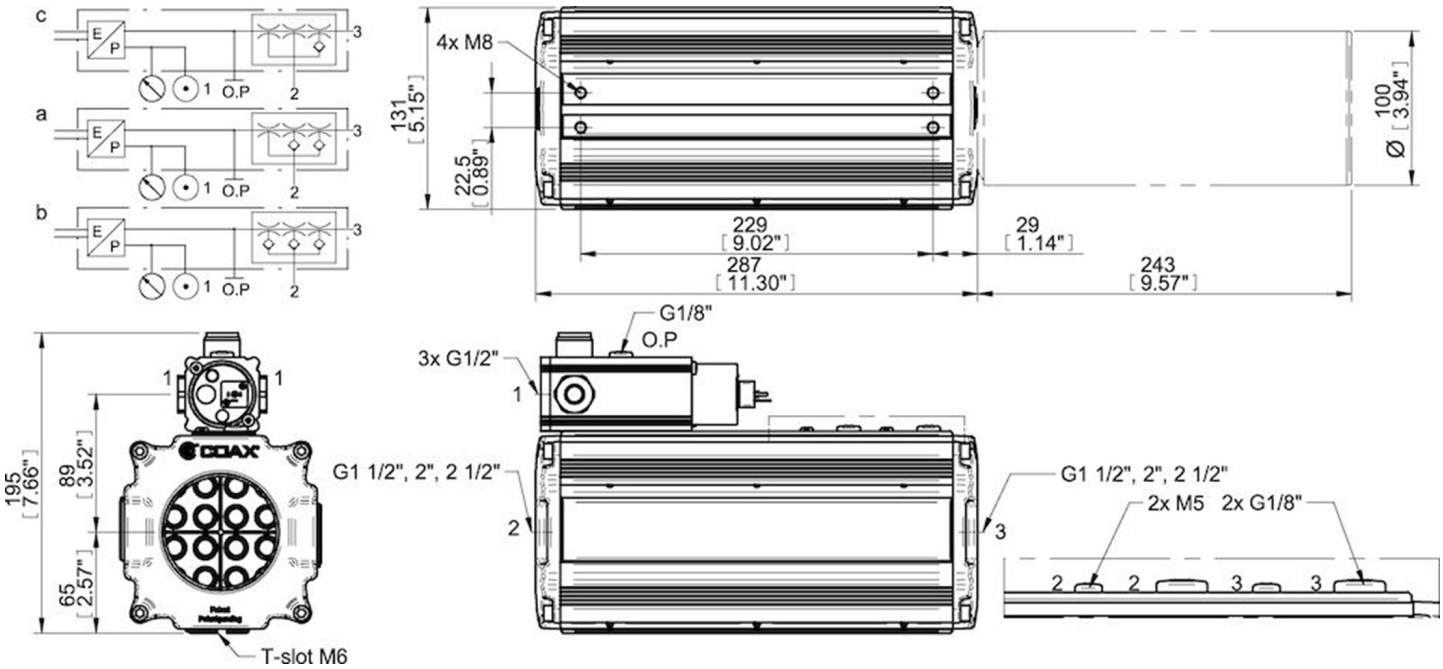
Dimensional drawings