piab Evolving automation

Item no: 0101071

Electrically controlled 2/2 valve DIP55 NC 2406 SD

Choose between solenoid, electrically or vacuum-controlled valves. The vacuum controlled valve (Vacustat) shuts off the flow of compressed air to the pump when the pre-set level is reached, and consequently the consumption of compressed air is minimised.

- On/off valve
- 1/8" NPSF ports
- 0.6 W solenoid
- Electrical connections: DIN (c)
- Suitable for Piab vacuum pumps up to Classic size.
- Manual override

General

Material	TPU, PUR, PA, PPS, AL, CUZN, NBR
Temperature	0 - 60 °C
Weight, min.	102 g

Mechanical data

Bore through diameter	3.7 mm

Electrical data

Display	LED
Load time rating	100 %
Power	0,6 W
Safety classification	IP65
Supply voltage	24 VDC

Performance

Feed pressure	0.4 - 0.7 MPa

Pneumatic data

Flow (nominal)	8.6 Nl/s
kv	7.8 Nl/s
Life span	10000000 cycles
Valve function	NC
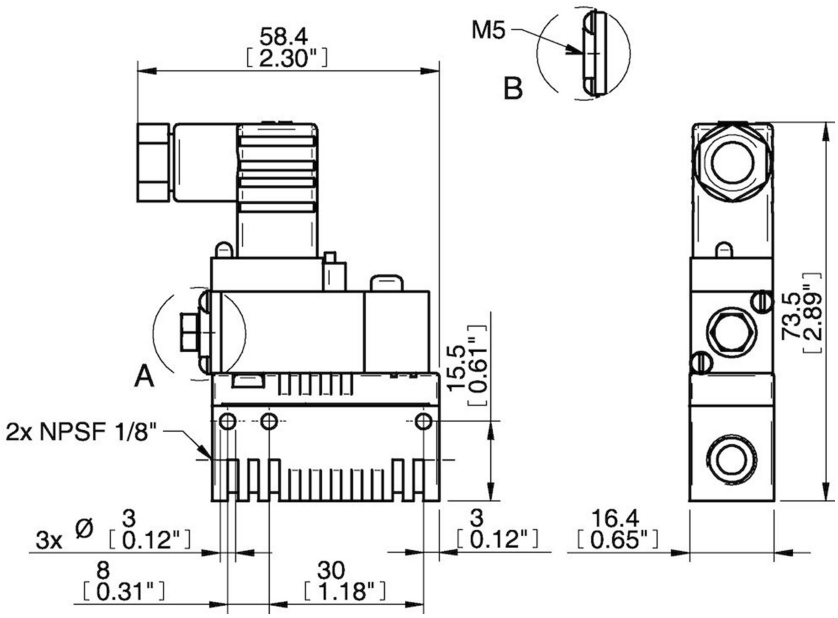
Dimensional drawings